Measurement-Free Error Correction Via Multi-Qubit Syndrome Gate Encoding

Han Wang

HKUST(GZ)

2025-07-14

Motivation

- Developing a one-step parity check process with global pulse sequence.
- The errored qubit can be corrected by the ancilla qubits without measurement.

Model

- Three different species.
- Parity check: (Z-error in plaquette A2), (X-error in plaquette A1)
- Strong interaction between different species, weak interaction between same species.

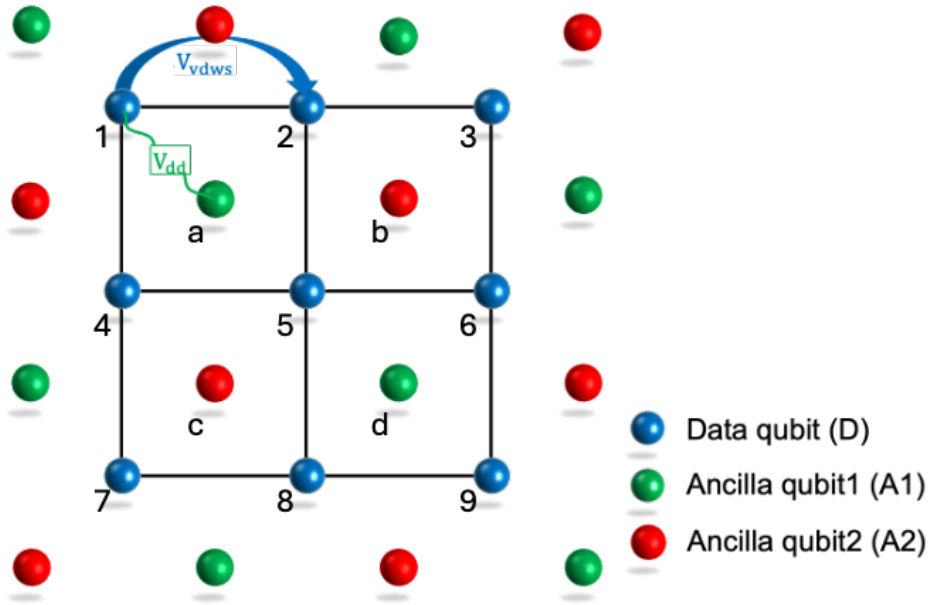

Effective parity-check process

- We intend to perform effective parity-check process with CNOT_4 gate.
- target:

– no error → all qubits keep invariant after the effective pulse sequence.

– X-error → neighboring ancilla qubit A1(green dots) will flip.

– Z-error → neighboring ancilla qubit A2(red dots) will flip.

Effective parity-check process

- pulse sequence:

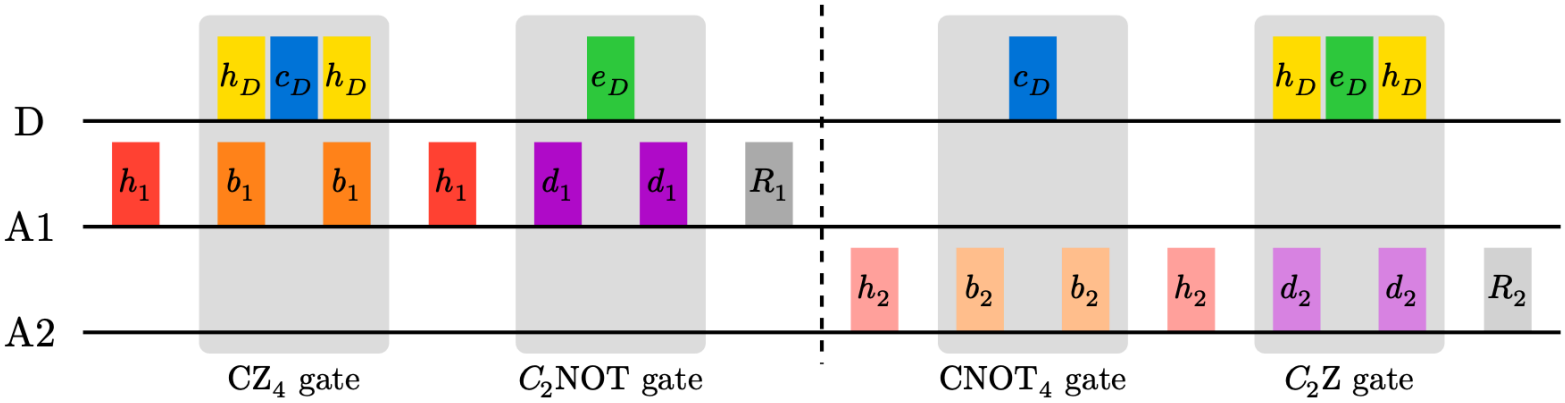

- Effect of different pulses:

– Pulse $h_D/h_1/h_2$: act on D/A1/A2, Hadamard gate

– Pulse b_1/b_2: act on A1/A2, state transition $|1\rangle \leftrightarrow |r\rangle$ – Pulse c_D: act on D, if any neighboring A1 or A2 qubit in state $|r\rangle$, state transition $|0\rangle \leftrightarrow |1\rangle$, otherwise, do nothing.

Effective parity-check process

Note: it is a composite pulse, also known as the EIT pulse. – Pulse d_1/d_2: act on A1/A2, state transition $|0\rangle \leftrightarrow |r\rangle$ – Pulse e_D: act on D, if any neighboring A1 or A2 qubit in state $|r\rangle$, do nothing, otherwise, state transition $|0\rangle \leftrightarrow |1\rangle$

– Pulse R_1/R_2: act on A1/A2, state transition $|?\rangle \rightarrow |0\rangle$ (reset)

Effective parity-check process

- Based on the rules above, we can perform the simulaton to prove the effectiveness of the parity check process.

Error correcting C_2NOT gate

- For example, if there is a Z-error happens on data qubit 5, the parity check will flip the neighboring red ancilla qubits b,c. Then, we can perform a C_2NOT gate for error correction where the two flipped neighboring ancilla qubits act as control qubits and the errored data qubit acts as target qubit.
- Rule: Only if the ancilla qubits are both in state $|1\rangle$, the target data qubit will be flipped.

Error correcting C_2NOT gate

- gate scheme:

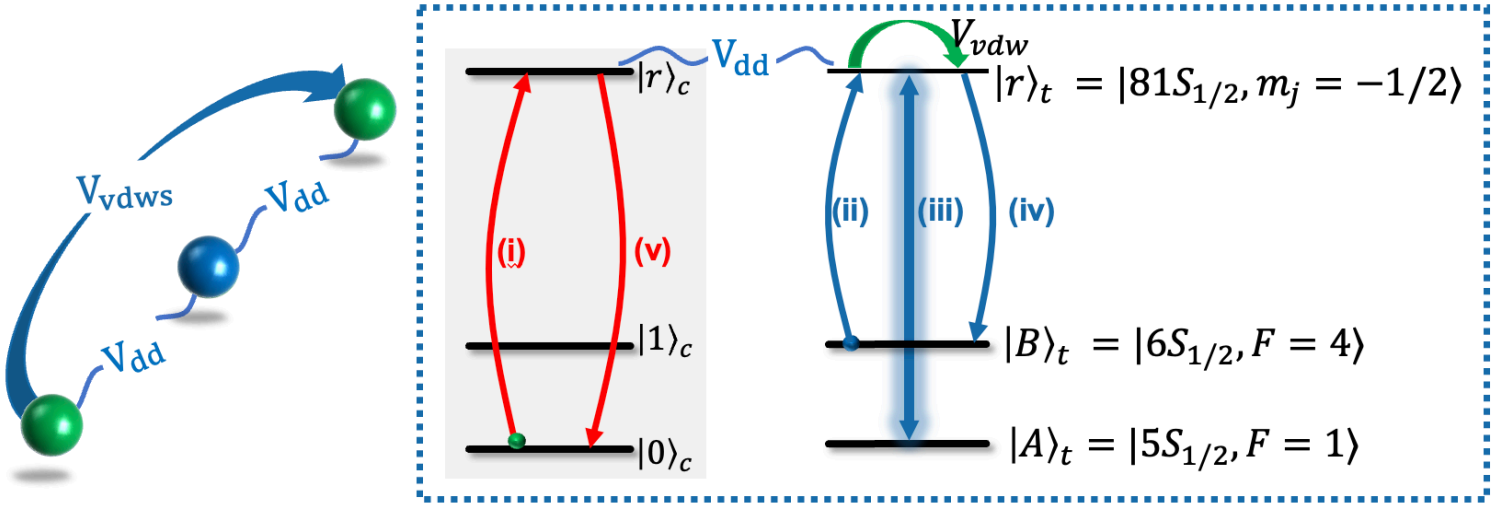

Main problem:

- Hard to construct effective multu-qubit gate for perfect parity check.
- The entanglement after applying the Hadamard gate is not easy to control.
- The direct parity check process is not easy to implement.

Appendix: Effective parity check

- If we assume that there is only one plaquette in the system, for example, we only consider data qubits 2,3,5,6 and one ancilla qubit b. The effective parity check can be implemented through CNOT_4 gate and Hadamard gates.

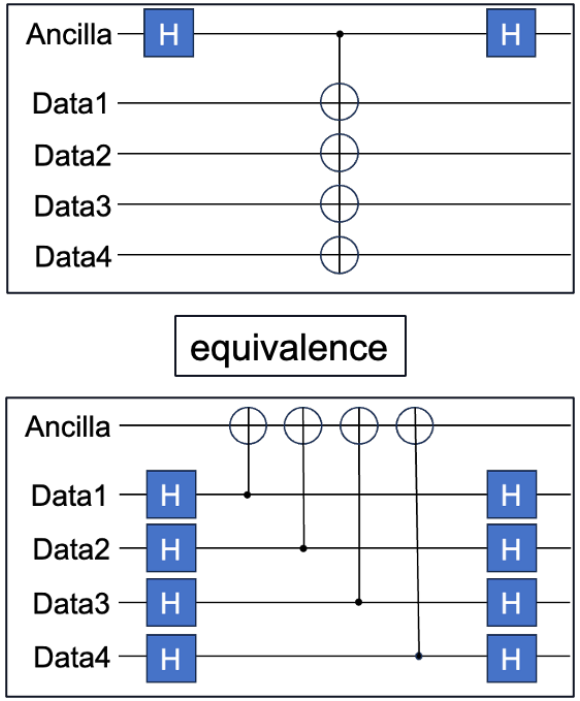

Appendix: Effective parity check

- In order to perform the CNOT_4 gate, we intend to use Rydberg blockade effect and:

– When ancilla qubit is in state $|0\rangle$, the data qubits are unchanged.

– When ancilla qubit is in state $|1\rangle$, the data qubits are flipped.

- For example:

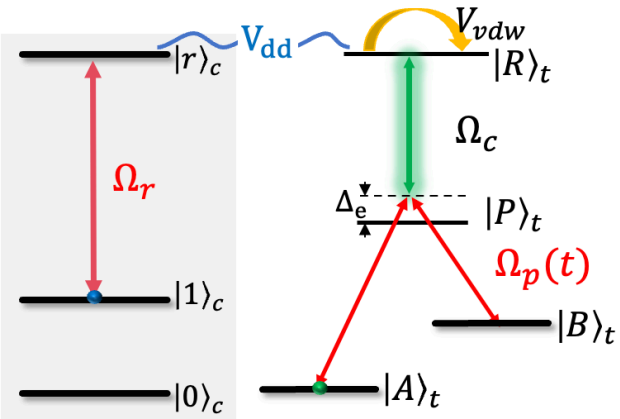

Appendix: Effective parity check

- However, in the real model, we need to consider larger system. Each data qubit is influenced by both neighboring ancilla qubits and each ancilla qubit is influenced by four neighboring data qubits. Thus, after applying a Hadamard gate, the entanglement between data qubits and ancilla qubits is not easy to control.

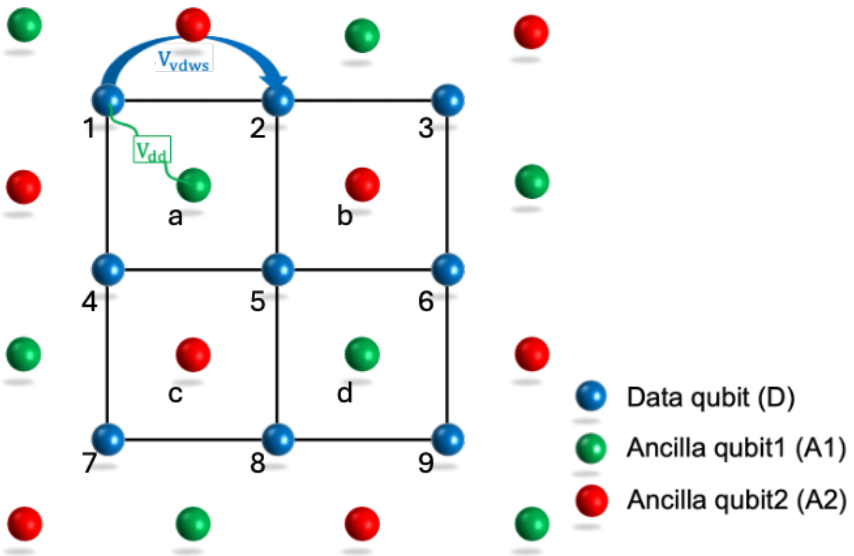

Appendix: Effective parity check

- Double control considered(whether the parity gate scheme can achieve effective parity check):

$$|0_c 0_c 0_t\rangle \leftrightarrow |0_c 0_c 0_t\rangle$$

$$|0_c 1_c 0_t\rangle \leftrightarrow |0_c 1_c 1_t\rangle$$

$$|1_c 0_c 0_t\rangle \leftrightarrow |1_c 0_c 1_t\rangle$$

$$|1_c 1_c 0_t\rangle \leftrightarrow |1_c 1_c 0_t\rangle$$

Literature Review

1. Construction of multi-qubit CNOT_k gate through EIT:[1], through optimization of the pulse[2], through adiabatic pulse design[3], [4] and experimental realization:[5], [6]; Parity gate construction through specially designed interaction strength[7].
2. Measurement-free fault-tolerant quantum error correction:[8]
3. Mid-circuit correction of correlated phase errors using an array of spectator qubits[9]

Bibliography

Bibliography

[1] J. M. Auger, S. Bergamini, and D. E. Browne, "Blueprint for fault-tolerant quantum computation with Rydberg atoms," *Phys. Rev. A*, vol. 96, no. 5, p. 52320, Nov. 2017, doi: 10.1103/PhysRevA.96.052320.

[2] J. Kazemi, M. Schuler, C. Ertler, and W. Lechner, "Multi-Qubit Parity Gates for Rydberg Atoms in Various Configurations." [Online]. Available: https://arxiv.org/abs/2506.09686

[3] C. Dlaska, K. Ender, G. B. Mbeng, A. Kruckenhauser, W. Lechner, and R. van Bijnen, "Quantum Optimization via Four-Body Rydberg Gates," *Phys. Rev. Lett.*, vol. 128, no. 12, p. 120503, Mar. 2022, doi: 10.1103/PhysRevLett.128.120503.

[4] A. M. Farouk, I. I. Beterov, P. Xu, S. Bergamini, and I. I. Ryabtsev, "Parallel Implementation of CNOTN and C2NOT2 Gates via Homonuclear and Heteronuclear

Bibliography

Förster Interactions of Rydberg Atoms," *Photonics*, vol. 10, no. 11, 2023, doi: 10.3390/photonics10111280.

[5] C.-Y. Guo, L.-L. Yan, S. Zhang, S.-L. Su, and W. Li, "Optimized geometric quantum computation with a mesoscopic ensemble of Rydberg atoms," *Phys. Rev. A*, vol. 102, no. 4, p. 42607, Oct. 2020, doi: 10.1103/PhysRevA.102.042607.

[6] K. McDonnell, L. F. Keary, and J. D. Pritchard, "Demonstration of a Quantum Gate Using Electromagnetically Induced Transparency," *Phys. Rev. Lett.*, vol. 129, no. 20, p. 200501, Nov. 2022, doi: 10.1103/PhysRevLett.129.200501.

[7] F. Q. Guo, S. L. Su, W. Li, and X. Q. Shao, "Parity-controlled gate in a two-dimensional neutral-atom array." [Online]. Available: https://arxiv.org/abs/2405.19564

Bibliography

[8] S. Heußen, D. F. Locher, and M. Müller, "Measurement-Free Fault-Tolerant Quantum Error Correction in Near-Term Devices," *PRX Quantum*, vol. 5, no. 1, Feb. 2024, doi: 10.1103/prxquantum.5.010333.

[9] K. Singh, C. E. Bradley, S. Anand, V. Ramesh, R. White, and H. Bernien, "Mid-circuit correction of correlated phase errors using an array of spectator qubits," *Science*, vol. 380, no. 6651, pp. 1265–1269, 2023, doi: 10.1126/science.ade5337.